thormec™uk
thermal-earth heat pumps™

DO NOT SCALE IF IN DOUBT ASK

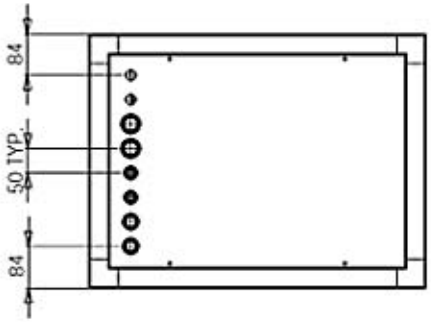

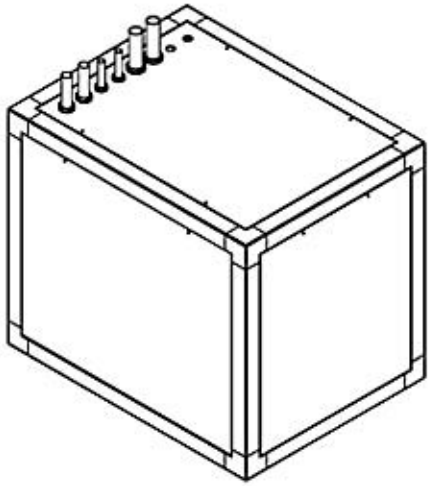

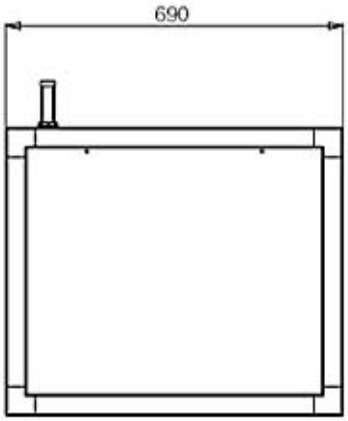

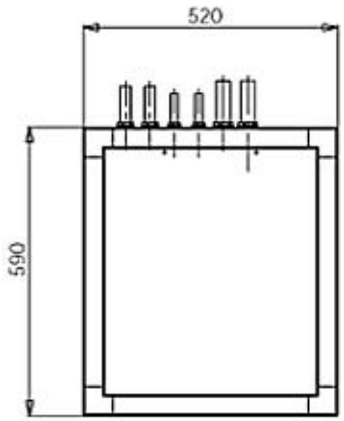

-	first issue	DATE
ISSUE NO.	MODIFICATIONS	DATE

thormec™uk
thermal-earth heat pumps™

UNLESS OTHERWISE STATED
1. ALL DIMENSIONS IN MILLIMETRES
2. ALL UNCLEARANCED DIMENSIONS TO BE
a) MACHINED ± 0.25
b) FABRICATED UP TO 1000mm ± 1mm
OVER 1000mm ± 2mm
3. ALL ANGULAR DIMENSIONS TO BE ± 1 DEGREE

THIS DRAWING IS COPYRIGHT AND CONTAINS INTELLECTUAL PROPERTY RIGHTS OF THERMAL ENGINEERING SYSTEMS LTD. IT MAY NOT BE COPIED IN WHOLE OR IN PART OR USED FOR MANUFACTURE WITHOUT PRIOR WRITTEN CONSENT OF THE COMPANY.
© THERMAL ENGINEERING SYSTEMS LTD

DRAWN BY JVS		THIRD ANGLE PROJECTION
CHECKED BY SCW		
DATE 21/06/06		NO. OF SHEETS SHT 1 OF 1 SHTS
QUOTE NO./ORDER NO.		DRAWING NO. 3748

A1